TiLite **2GX** **Canadian** Order Form

Effective Aug 2025 (New Items in Red)

FOLDING FRAME

PROVIDER INFORMATION			
Provider:	Account #:		
PO:	Ordered By:		
Email:		**SHIP TO INFORMATION**	
Mark For:		Name:	Ship Via:
TiLite Sales Rep:		Address:	
TiLite Information:	Promo Code:	City:	Province: / Postal Code:
Ship Date:	Order #:	Phone:	Fax:

Please Email to the Permobil Manual Customer Experience Team at orders@permobil.com or Fax to 509.586.2413

FRAME STYLE

GXFS4 ❑ **2GX Titanium Frame** *(Full Adjustability. 265 (120.2kg) Pound Weight Limit. Light Weight and High Strength. Not Available with Frame Transit Tie-Down.)* **$5,478**

XFS1 ❑ **Swing Away** ..... **STD**

XFS3 ❑ **Hemi Height Frame** *(Available with a Front Seat Height of 13.5" - 20" (34.3-50.8cm). Not Available with Depth Adjustable Back/Frame, 12" or 13" (30.5cm or 33cm) Seat Depth or Heavy Duty Frame.)* ..... **NCO**

XFS2 ❑ **Fixed Front** ..... **NCO**

XHDR1 ❑ **Heavy Duty Frame** ***(350 (158.75kg) Pound Weight Limit.*** *Requires Tension Adjustable by Straps Back Upholstery. Available with 18" to 22" (45.7 to 55.9cm) Seat Widths & 16" to 20" (40.6 to 50.8cm) Seat Depths. Not Available with 90° front end)* ..... **NCO**

XRFR1 ❑ **Reinforced Frame** ..... **NCO**

SMARTDRIVE POWER ASSIST SYSTEM

XMAXSD1 ❑ **Permobil SmartDrive MX2+*** *(Must also select Battery Pack when selecting this option. N/A with rear seat heights less than 13.5" or 20" rearwheels)* **$7,461**

XMAXSD9 ❑ Battery Pack *(Enclosed in SmartDrive system.)* **$528**

XMAXSD18 ❑ SwitchControl Buttons ..... **NCO**

XMAXSD8 ❑ SwitchControl with Mono Jack Option ..... **NCO**

XMAXSD19 ❑ ***NEW*** Buddy Button ..... **NCO**

XMAXSD4 ❑ Carrying Bag **$110**

XMAXSD10 ❑ Universal Padded Handle **$31**

**SmartDrive apps available on Apple App Store and Google Play Store for Apple Watch Series 5 or newer and Samsung Galaxy Watch 4*

TRANSIT OPTIONS

XWTB ❑ Transport Bracket Option *(Consists of four Tie-Down Brackets.* ***Unoccupied Use Only****.) (Not Available when Swing Away frame and Heavy Duty Frame are both selected. Not available with Swing Away Tubular Armrest or Swing Away -Flip Back Tubular Armrests. Requires a minimum seat depth of 14" (35.6cm) or 15" (38.1cm) seat Depth with Hemi Height Frame.)* **$422**

FRAME FINISHES

Natural Finishes

XFF1 ❑ Satin *(Available with Titanium Frame only)* ..... **STD**

XSCBT1 ❑ Satin Finish Buffing Pads **$22**

XFF3 ❑ Tattoos *(Tattoos on front frame tubes. Titanium frame finished in Satin Aluminum frame finished in blasted aluminum with clear coat. Tattoos will be trimmed and adjusted to fit your frame.)* **$394**

XFF45 ❑ **Need For Speed**

XFF44 ❑ **Flower Garden**

XFF43 ❑ **Mosaic**

❑ XFF8 High Gloss Black	❑ XFF10 Red Pepper	❑ XFF29 Neon Pink
❑ XFF14 Ocean Blue Metallic	❑ XFF15 Tangerine Metallic	❑ XFF30 Acid Green Metallic
❑ XFF17 Midnight Blue Pearl	❑ XFF18 White Pearl	❑ XFF19 Black Lava
❑ XFF27 Titanium Grey	❑ XFF59 Pomegranate Red	❑ XFF62 Blue Mist
❑ XFF57Indigo Purple	❑ XFF40 Hyper Blue	❑ XFF41 Flame Orange
❑ XFF42 OD Green	❑ XFF60 Silver Streak	❑ XFF63 Lavender Dusk
❑ XFF58 Black Galaxy	❑ XFF61 Seafoam Green	❑ XFF64 Daffodil Yellow ..... **STD**

FRAME MEASUREMENTS

Measurements shown below are our most popular selections. Not seeing what you want? Contact customer service or visit our Creative Mobility Division (CMD) catalog here to view additional options.

SEAT WIDTH A Measure from outside of seat tube at back post to the outside of the opposite seat tube at back post.

XSW1 ❑ 12" ❑ 13" ❑ 14" ❑ 15" ❑ 16" ❑ 17" ❑ 18" ❑ 19" ..... **STD**

XSW2 ❑ 20" ❑ 21" ❑ 22" *(21" and 22" Seat Widths A are only available with Heavy Duty Frame.)* **$541**

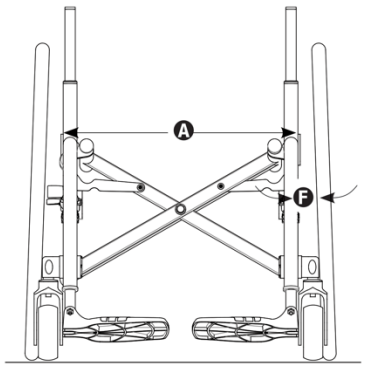

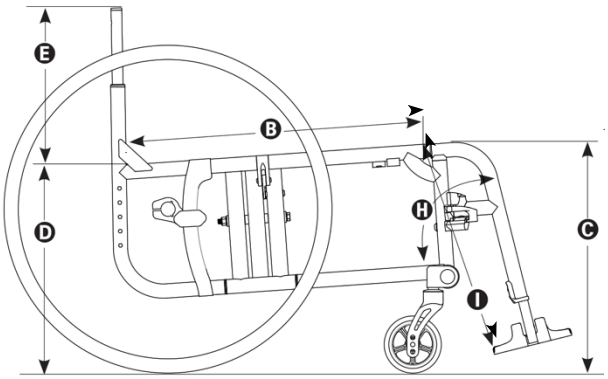

SEAT DEPTH B Measure from 1/2" (1cm) in front of back post to the front edge of seat sling. *(12"-14" (30-35.6cm) Seat Depths B not available With 25" (559) and 26" (560) Rear Wheels.)*

XSD1 ❑ 12" (30.5cm) ❑ 13" (33cm) ❑ 14" (35.6cm) ❑ 15" (38.1cm) ❑ 16" (40.6cm) ❑ 17" (43.2cm) ❑ 18" (45.7cm) ❑ 19" (48.3cm) ..... **STD**

XSD2 ❑ 20" (50.8cm) **$590**

XSD3 ❑ Custom Frame Depth:_____" Frame Depth Longer Than Seat Depth *(Use 1" (2.5cm) increments with a maximum of 2" (5.1cm). A Custom Frame Depth with a maximum of 20" (50.8cm) is additional charge.)* ..... **NCO**

FRONT SEAT HEIGHT C Measure from floor to top of seat tube at front edge of seat sling Adjustable in 1/2" (1.3cm) increments. *(13.5" - 14" (34.3-35.6cm) Front Seat Height C requires Hemi Height Frame Style. 20.5" - 21" (52.1-53.3cm) Front Seat Height C not available with Hemi Height Frame Style.*

FRONT SEAT HEIGHT RANGES

Front Wheel Size	Front Seat Heights C	Hemi Front Seat Heights C
3" Front Wheel	14.5" - 18.5" (36.8-47cm)	13.5" - 17.5" (34.3-44.5cm)
3" Front Wheel w/Glide™	16.0" - 17.5" (40.6-44.5cm)	15.0" - 17.0" (38.1-43.2cm)
4" Front Wheel	15.5" - 19.0" (39.4-48.3cm)	14.5" - 18.0" (36.8-45.7cm)
4" Front Wheel w/Glide™	16.5" - 18.0" (41.9-45.7cm)	15.5" - 17" (39.4-43.2cm)
5" Front Wheel	16.5" - 19.5" (41.9-49.5cm)	16.0" - 18.5" (40.6-47cm)
5" Front Wheel w/Glide™	17.5" - 18.5" (44.5-47cm)	16.5" - 18.0" (41.9-45.7cm)
6" Front Wheel	17.5" - 20.0" (44.5-50.8cm)	16.5" - 19.0" (41.9-48.3cm)
6" Front Wheel w/Glide™	19.0" (48.3cm)	17.5" - 18" (44.5-45.7cm)
8" Front Wheel	19.5" - 21.0" (49.5-53.3cm)	18.5" - 19.5" (47-50.8cm)

XFSH1 ❑ 13.5" (34.3cm) ❑ 14" (35.6cm) ❑ 14.5" (36.8cm) ❑ 15" (38.1cm) ❑ 15.5" (39.4cm) ❑ 16" (40.6cm) ❑ 16.5" (41.9cm) ❑ 17" (43.2cm) ❑ 17.5" (44.5cm) ❑ 18" (45.7cm) ❑ 18.5" (47cm) ❑ 19" (48.3cm) ❑ 19.5" (49.5cm) ❑ 20" (50.8cm) ❑ 20.5" (52.1cm) ❑ 21" (53.3cm) ..... **STD**

REAR SEAT HEIGHT D Measure from floor to top of seat tube at back post. Adjustable in 3/8" increments.

REAR SEAT HEIGHT RANGES

Rear Wheel Size	Rear Seat Height D
22"	13" - 18" (33-45.7cm)
24"	14" - 19" (35.6-48.3cm)
25"	14" - 19" (35.6-48.3cm)
26"	15" - 20" (38.1-50.8cm)

XRSH1 ❑ 13" (33cm) ❑ 13.5" (34.3cm) ❑ 14" (35.6cm) ❑ 14.5" (36.8cm) ❑ 15" (38.1cm) ❑ 15.5"(39.4cm) ❑ 16" (40.6cm) ❑ 16.5" (41.9cm) ❑ 17" (43.2cm) ❑ 17.5" (44.5cm) ❑ 18" (45.7cm) ❑ 18.5" (47cm) ❑ 19" (48.3cm) ❑ 19.5" (49.5cm) ❑ 20" (50.8cm) **STD**

BACK SUPPORTS

COMFORT ACTA-BACK® Back Support

Shell Height ❑ 10" ❑ 12" ❑ 14" ❑ 16" ❑ 18" **$896**

❑ 20" **$896**

❑ Acta-Back with 2-PT Quick Release Compass Hardware ..... **NCO**

❑ Comfort-Tek Cover ❑ Stretch-Air Cover ..... **NCO**

❑ Color Accent (Colored piping along the edge of the cover on the backside of the backrest) ❑ Silver ..... **STD**

❑ Red ❑ Purple ❑ Pink ❑ Blue ❑ Green ❑ Orange ❑ Remove (no color) **$58**

❑ Comfort Privacy Shield **$80**

COMFORT ACTA-BACK® Deep Back Support

Shell Height ❑ 10" ❑ 12" ❑ 14" ❑ 16" ❑ 18" **$896**

❑ 20" **$896**

❑ Acta-Back with 2-PT Quick Release Compass Hardware ..... **NCO**

❑ Comfort-Tek Cover ❑ Stretch-Air Cover ..... **NCO**
❑ 3" Deep Wing ❑ 5" Deep Wing ..... **NCO**
❑ Color Accent (Colored piping along the edge of the cover on the backside of the backrest) ❑ Silver ..... **STD**
❑ Red ❑ Purple ❑ Pink ❑ Blue ❑ Green ❑ Orange ❑ Remove (no color) **$58**
❑ Comfort Privacy Shield **$80**

BACK SUPPORTS

COMFORT ACTA-EMBRACE™
Shell Height ❑ 10" ❑ 12" ❑ 14" ❑ 16"
SBRS16 ❑ Acta-Embrace Back with 2-PT Quick Release Compass Hardware **$840**
CPSB1 ❑ Comfort Privacy Shield **$58**

COMFORT ACTA-RELIEF
Shell Height ❑ 10" ❑ 12" ❑ 14" ❑ 16"
SBRS13 ❑ Acta-Relief Back with 2-PT Quick Release Compass Hardware **$1,061**
CPSB1 ❑ Comfort Privacy Shield **$58**

SEAT BACK HEIGHT E**/SEAT BACK/PUSH HANDLES** Measure from top of back post to top of seat tube at rear of frame.
SEAT BACK TYPE
XSB20 ❑ Fixed Angle, Adjustable-Height Seat Back ..... **STD**
XLB1 ❑ Folding Stabilizer Bar (Required with Transit Tie-Down Option unless Depth Adjustable Backrest is selected. Includes Tension Adjustable by Strap Back Upholstery.) **$427**
XSB14 ❑ Fixed Angle, Adjustable Height Seat Back w/8-Degree Bend. *(Not available with Heavy Duty Frame.)* ..... **NCO**
XSB18 ❑ Folding Adjustable-Angle and Height Seat Back *Not Available with Hemi Height Frame, Heavy Duty Frame, 19" or 20" (48.3 or 50.8cm) Seat Depths* B *or Swing Away Tubular Armrest. Seat Depths* B *of 12"-17" (30.5-43.2cm) allow 3" (7.6cm) of rearward adjustment. Seat Depth* B *of 18" (45.7cm) allow 2" (5.1cm) of rearward adjustment. Requires Tension Adjustable Seat Upholstery)* **$252**
XSB16 ❑ Depth Adjustable Back/Frame *(Not Available with Hemi Height Frame, Heavy Duty Frame, 19" or 20" (48.3 or 50.8cm) Seat Depths* B*,Swing Away Tubular or Swing Away Flip-Back Armrest. Seat Depths* B *of 12"-17" (30.5-43.2cm) allow 3" (7.6cm) of rearward adjustment. Seat Depth* B *of 18" (46cm) allow 2" (5cm) of rearward adjustment. Requires Tension Adjustable Seat Upholstery)* ..... **NCO**

PUSH HANDLES
XSB6 ❑ Integrated Push Handles ..... **NCO**
XSB7 ❑ Integrated Fold-Down Push Handles *(Requires Tension Adjustable by Straps Back Upholstery. Not available with Heavy Duty Frame.)* **$126**
XSB9 ❑ Bolt-On Height Adjustable Push Handles *(Requires Tension Adjustable by Straps Back Upholstery. Not available with Heavy Duty Frame, Folding Adjustable-Angle and Height Seat Back, Swing Away Tubular Armrests, Swing Away - Flip Back Tubular Armrests.)* **$449**

FRAME MEASUREMENTS

Options shown below are our most popular selections. **Not seeing what you want?** Contact customer service or visit our Creative Mobility Division (CMD) catalog here to view additional options.

XSB20/XSB14 **FIXED ANGLE ADJUSTABLE SEAT BACK HEIGHT** E *(11"- 15" Fixed Seat Back Height not available with Heavy Duty Frame, Swing Away Tubular Arms 12"-15", Bolt-On Adjustable Height Push Handles or Folding Stabilizer Bar.)*

Push Handles *(Selected on Pg. 2)*	**Short**	**Tall**	**Set at:** *(Use 1" Increments)*
None	❑ 11.0"- 15.0"	❑ 16"- 20"	**Set at:**_____
Integrated	❑ 11.0"- 15.0"	❑ 16"- 20"	**Set at:**_____
Integrated Fold-Down	❑ 11.0"- 15.0"	❑ 16"- 20"	**Set at:**_____
Bolt-On Height Adj.	----------	❑ 16"- 20"	**Set at:**_____

XSB18 **FOLDING ADJUSTABLE- ANGLE AND HEIGHT SEAT BACK** E *(Not available with a Folding Stabilizer Bar or Heavy Duty Frame)*

Push Handles *(Selected on Pg. 2)*	**Short**	**Medium**	**Tall**	**Set at:** *(Use 1" Increments)*
None	❑ 11.0" – 13.0"	❑ 13.5" – 16.5"	❑ 16.5" – 19.5"	**Set at:**_____
Integrated	❑ 12.5" – 14.5"	❑ 13.5" – 16.5"	❑ 17.0" – 19.5"	**Set at:**_____
Integrated Fold-Down	❑ 15.0" – 17.0"	❑ 16.0" – 19.0"	❑ 18.5" – 20.5"	**Set at:**_____

CAMBER F
XCBR8 ❑ 0° ❑ 2° ❑ 4° ❑ 6° ..... **STD**

FRONT ANGLE H Front Angle H is measured from inside of front frame tube to top of bottom frame tube.
Swing Away Front End
XFA3 ❑ 70° ❑ 80° ❑ 85° *(Not available with 6" Front Wheels.)* ❑ 90° *(Requires aluminum footplate. Not available with Heavy Duty Frame, 5" or 6" Front Wheels.)* ..... **STD**
XFA0 ❑ Omit Hangers ..... **NCO**
Fixed Front End
XFA6 ❑ 70° ❑ 80° ❑ 85° *(85° Not available with 6" Front Wheels)* ..... **STD**

SEAT TO FOOTREST I/FOOTRESTS Measure from front edge of seat sling to top rear of footrest.

If your Front Angle H is 70°, 80° OR 85° select one Seat to Footrest I length and one Footrest type:

Standard Footrests Measurement must be at least 2" shorter than Front Seat Height C. 70° Fixed Front has a minimum seat to footrest of 14.5"

❑ 14" (35.6cm) ❑ 14.5" (36.8cm) ❑ 15" (38.1cm) ❑ 15.5" (39.4cm) ❑ 16" (40.6cm) ❑ 16.5" (41.9cm)
❑ 17" (43.2cm) ❑ 17.5" (44.5cm) ❑ 18" (45.7cm) ❑ 18.5" (47cm) ❑ 19" (48.3cm) ❑ 19.5" (49.5cm) ❑ 20" (50.8cm)

XFTR5	❑ Flip-up Footrest	**STD**
XFTR9	❑ Depth Adjustable Flip-up Footrest	**$121**
XFTR10	❑ Depth & Angle Adjustable Flip-up Footrest *(Available for 15"- 20" (38.1-50.8cm) Seat to Footrest I only.)*	**$296**
XFTR11	❑ Angle Adjustable Flip-up Footrest *(Available for 15"- 20" (38.1-50.8cm) Seat to Footrest I only.)*	**$257**

High Mount Footrests *(Not Available with Luggage Carriers, or Impact Guards)*

❑ 7" (17.8cm) ❑ 7.5" (19.1cm) ❑ 8" (20.3cm) ❑ 8.5" (21.6cm) ❑ 9" (22.9cm) ❑ 9.5" (24.1cm)
❑ 10" (25.4cm) ❑ 10.5" (26.7cm) ❑ 11" (27.9cm) ❑ 11.5" (29.2cm) ❑ 12" (30.5cm) ❑ 12.5" (31.8cm)
❑ 13" (33cm) ❑ 13.5" (34.3cm) ❑ 14" (35.6cm) ❑ 14.5" (36.8cm)

XFTR20	❑ High Mount Flip-up	**$208**
XFTR15	❑ Angle Adjustable High Mount Flip-up Footrest	**$356**
XFTR16	❑ Depth & Angle Adjustable High Mount Flip-up Footrest	**$410**

Elevating Leg Rest

❑ 14" ❑ 15" ❑ 16" ❑ 17" ❑ 18" ❑ 19" ❑ 20" ❑ 21"

XFA5	❑ Single Depth Adjustable Flip-up Footrest - ❑ Left OR ❑ Right	**$187**
XFTR17	❑ Depth Adjustable Flip-up Footrest - Pair	**$394**

If your Front Angle H is 90°, select one Seat to Footrest I length and one Footrest type:

❑ 7" (17.8cm) ❑ 8" (20.3cm) ❑ 9" (22.9cm) ❑ 10" (25.4cm) ❑ 11" (27.9cm) ❑ 12" (30.5cm) ❑ 13" (33cm)

XFTR5	❑ Flip-up Footrest	**STD**
XFTR9	❑ Depth Adjustable Flip-up Footrest	**$121**
XFTR10	❑ Depth & Angle Adjustable Flip-up Footrest	**$296**
XHLP1	❑ **Heel Loops** *(Not available with 13" (33cm) or narrower Seat Width A or 1-Piece Footrests.)*	**$66**

CUSTOM CONFIGURATION OPTIONS

FRONT WHEELS *(See Front Seat Height Ranges Chart on Page 2 for Front Seat Height C limitations.)*

XFW24	❑ 3"x1.4" LiteSpeed-7 Billet Aluminum Wheel w/Soft Roll Tire ❑ Silver Hub **OR** ❑ Black Hub	**$197**
XFW14	❑ 4"x.75" Plastic Wheel w/Poly Tire *(Not available with Power Adaptable Frame, Heavy Duty Frame or Glide™ Single-Sided Suspension Fork.)*	**NCO**
XFW3	❑ 4"x.75" Light-Up Micro-Caster *(Not available with Power Adaptable Frame, Heavy Duty Frame or Glide™ Single-Sided Suspension Fork.)*	**$88**
XFW26	❑ 4"x1.4" LiteSpeed-7 Plastic Wheel w/Soft Roll Tire *(Not available with Power Assist, Power Add-on System or Heavy Duty Frame.)*	**$104**
XFW27	❑ 4"x1.4" LiteSpeed-7 Billet Aluminum Wheel w/Soft Roll Tire ❑ Silver Hub **OR** ❑ Black Hub	**$208**
XFW6	❑ 5"x1" Plastic Wheel w/Poly Tire *(Not available with Heavy Duty Frame or with 90º Front Angle H or Glide™ Single-Sided Suspension Fork.)*	**NCO**
XFW28	❑ 5"x1.4" LiteSpeed-7 Plastic Wheel w/Soft Roll Tire *(Not available with Heavy Duty Frame or 90º Front Angle H.)*	**$100**
XFW30	❑ 5"x1.4" LiteSpeed-7 Billet Aluminum Wheel w/Soft Roll Tire ❑ Silver Hub **OR** ❑ Black Hub *(Not available with +90º Front Angle H.)*	**$274**
XFW9	❑ 6"x1" Plastic Wheel w/Poly Tire *(Not available with Power Adaptable Frame, Heavy Duty Frame or 85º or 90º Front Angle H or Glide™ Single-Sided Suspension Fork.)*	**NCO**
XFW32	❑ 6"x1.4" LiteSpeed-7 Plastic Wheel w/Soft Roll Tire *(Not available with Power Adaptable Frame, Heavy Duty Frame, 85º or 90º Front Angle H, or Glide™ Single-Sided Fork)*	**$110**
XFW33	❑ 6"x1.4" LiteSpeed-7 Billet Aluminum Wheel w/Soft Roll Tire ❑ Silver Hub **OR** ❑ Black Hub *(Not available with 85º or 90º Front Angle H or Glide™ Single-Sided Suspension Fork.)*	**$274**
X2FW16	❑ 8"x1" Plastic Wheel w/Poly Tire *(Not available with Power Assist, Power Add-on, Heavy Duty Frame or Glide™ Single-Sided Available with 70º Front Angle H only.) (Not available with 12"-14" Seat Depths)*	**NCO**

FRONT FORKS

XFK1	❑ TiLite Standard Fork	**STD**
XGL1	❑ Glide™ Suspension Fork *(Available in Black anodize only. Not available with 8" Front Wheels or Heavy Duty Frame)*	**$596**

Rider's Weight: ❑ 125 lbs. ❑ 125-180 lbs. ❑ 180-265 lbs.

ONE ARM DRIVE

XOAD1	❑ One Arm Drive *(Available with 24" Mag Wheels only. Rear Seat Height, Camber or axle restrictions may apply.)*	**$1,704**

Drive Handrim Side *(Available with standard aluminum handrim only.)*

❑ Install on Left ❑ Install on Right

STANDARD REAR WHEELS *(See Rear Seat Height Ranges Chart on Page 2 for Rear Seat Height D limitations.)*

XRW14 TiLite SHADOW™ **STD**

❑ 22"(501)
❑ 24"(540)
❑ 25"(559) *(Requires 15" (38.1cm) minimum Seat Depth B.)*
❑ 26"(590) *(Requires 15" (38.1cm) minimum Seat Depth B.)*

XRW7 Spinergy SPOX ❑ Black ❑ Red ❑ Blue ❑ White **$983**
❑ 22"(501) - Std. Hub
❑ 24"(540) - Std. Hub
❑ 25"(559) - Std. Hub *(Requires 15" (38.1cm) minimum Seat Depth B.)*
❑ 26"(590) - Std. Hub *(Requires 15" minimum Seat Depth B.)*

XRW8 Spinergy LX *(Only available with Heavy Duty Frame when 0 or 2 degree camber is selected.)* ❑ Black ❑ Red ❑ Blue
❑ White ❑ Bright Orange ❑ Flamingo Pink ❑ Purple ❑ Green **$1,153**
❑ 22"(501) - Std. Hub
❑ 24"(540) - Std. Hub
❑ 25"(559) - Std. Hub *(Requires 15" (38.1cm) minimum Seat Depth B.)*
❑ 26"(590) - Std. Hub *(Requires 15" (38.1cm) minimum Seat Depth B. Not available with Quad Release Axles.)*

XRW9 Spinergy Design Lab LX Wheels *(Available with black spokes only.)*
❑ Gold Anodize ❑ Green Anodize ❑ Blue Anodize ❑ Red Anodize ❑ Purple Anodize ❑ Orange Anodize **$1,928**
❑ 22"(501) - Std. Hub
❑ 24"(540) - Std. Hub
❑ 25"(559) - Std. Hub *(Requires 15" minimum Seat Depth B.)*
❑ 26"(590) - Std. Hub *(Requires 15" minimum Seat Depth B.)*

XRW16 Spinergy® Carbon Blade with 3k Weave Carbon Fiber *(Not available with Heavy Duty Frame.)* **$1,682**
❑ 24"(540)
❑ 25"(559) *(Requires 15" minimum Seat Depth B.)*

XRW17 X-Core Mag *(Not available with Heavy Duty Frame, Short Tabs, Quad Release Axles, Spoke Guards or Omit Handrims Option Requires Aluminum Sliver Anodized Handrims)* **$121**
❑ 22"(501)
❑ 24"(540)

AXLES

XAXL1 ❑ Stainless Quick Release ..... **STD**
XAXL2 ❑ Titanium Quick Release **$318**
XAXL3 ❑ Quad Release *(Not available with Mag or 26"(590) Spinergy Spox or Spinergy LX Rear Wheels.)* **$187**

PNEUMATIC REAR TIRES

XRTR1 ❑ Treaded 22"(501), 24"(540), and 26"(590) *(Not available with 25"(559) Rear Wheels.)* ..... **STD**
XRTR2 ❑ Airless Inserts **$99**
XRTR3 ❑ 25"(559) Primo Treaded *(Standard with 25"(559) Rear Wheels.)* ..... **STD**
XRTR4 ❑ Primo ..... **NCO**
XRTR31 ❑ MBL SpeedLite 20"(451), 22"(501), 24"(540), 25"(559) and 26"(590) ..... **STD**
XRTR30 ❑ 24"(540), 25"(559) and 26"(590) Primo Sentinel **$175**
XRTR8 ❑ 24"(540), 25"(559) and 26"(590) Schwalbe® Marathon Plus Evolution **$170**
XRTR32 ❑ 24"(540) Primo C-763 Knobby Tires **$106**

SOLID REAR TIRES

XRTR22 ❑ 22"(501), 24"(540) and 25"(559) Primo Orion *(Not available with Spinergy Carbon Blade Rear Wheels.)* **$121**
XRTR23 ❑ 24"(540) and 25"(559) Primo Active **$148**

HANDRIMS

XRIM1 ❑ Aluminum – Silver Anodized ..... **STD**
XRIM21 ❑ Aluminum – Black Anodized **$66**
XRIM12 ❑ Titanium – Satin Finish *(Not available with 20"(451) or 22"(501) Rear Wheels, or 24"(540) Knobby tires.)* **$536**

The Natural-Fit® (Original, Larger Profile)
XRIM14 ❑ Standard Grip *(Not available with Short Tabs or Spinergy Carbon Blade Rear Wheels.)* **$454**
XRIM15 ❑ Super Grip *(Not available with Short Tabs or Spinergy Carbon Blade Rear Wheels.)* **$514**
XRIM16 ❑ Without Thumb Grip **$415**

The Natural-Fit® LT (Reduced Weight, Smaller Profile)
XRIM17 ❑ Standard Grip *(Not available with Short Tabs or Spinergy Carbon Blade Rear Wheels.)* **$546**
XRIM18 ❑ Super Grip *(Not available with Short Tabs or Spinergy Carbon Blade Rear Wheels.)* **$585**
XRIM19 ❑ Without Thumb Grip **$503**
XRIM10 ❑ The Surge (All-In-One Oval with Gription™ Strip, Larger Profile) **$476**
XRIM11 ❑ The Surge LT (All-In-One Oval with Gription™ Strip, Smaller Profile) **$514**
XRIM20 ❑ Q-Grip (Exclusive High-Friction, Anti-Slip Coating) **$410**

Additional Handrim Options

XRIM5 ❑ Plastic Coated – Black **$175**
XRIM22 ❑ Omit Handrims ..... **NCO**

Tab Length

XRIM7 ❑ Long Tabs ..... **STD**
XRIM8 ❑ Short Tabs *(Not available with Mag Rear Wheels or The Natural-Fit® Handrims with Thumb Grip.)* **$39**

WHEEL LOCKS *(Composite wheel locks not always compatible with 12"-13" (30-33cm) Seat Depth. Uni-locks will be substituted at no charge.)*

XWLK7 ❑ Compact Composite Push to Lock ..... **NCO**
XWLK8 ❑ Compact Composite Pull to Lock ..... **NCO**
XWLK10 ❑ Extension Handles for Compact Composite Push/Pull to Lock **$94**

Additional Wheel Locks

XWLK11 ❑ MBL Composite Scissor Lock *(Not available on Swing Away.)* **$225**
XWLK3 Uni-Lock Set At: ❑ Push **OR** ❑ Pull **$181**
XWLK4 ❑ Extension Handles for Uni-Lock **$94**
XWLK15 ❑ Grade Aids Push to Lock *(Not available with solid rear tires)* **$252**

BACK UPHOLSTERY (*Want more seating options? Click here to view the new TiLite Seating Order Form.)*

XBUP1 ❑ Padded Nylon *(Black Only. Not available with Heavy Duty Frame, Folding Back, Folding Stabilizer Bar, Depth Adjustable Frame, Fold-Down Push Handles or Ultrasuede Backrest Stripe.)* ..... **STD**

Tension Adjustable by Straps *(Included with Heavy Duty Frame. Required with Aluminum Fendered Side Guards and Fold-Down Push Handles.)*

XBUP3 ❑ Padded Nylon **$454**
XBUP5 ❑ AIR Breathable Upholstery *(Not available with Ultrasuede Backrest Stripe.)* **$437**
XUPC3 Ultrasuede Backrest Stripe ❑ Black *(Not available with Padded Nylon or AIR Breathable Back Upholstery.)* **$116**
XBUP0 ❑ Omit Back Upholstery ..... **NCO**

SEAT UPHOLSTERY

XSUP4 ❑ Tension Adjustable *(Black only)* ..... **STD**
XSUP0 ❑ Omit Seat Upholstery ..... **NCO**

SEAT CUSHION (*Want more seating options? Click here to view the new TiLite Seating Order Form.)*

XCSH2 ❑ Comfort Curve Cushion *(Stretch-Air cover)* **$150**
XCSH23 ❑ Comfort Embrace Zero Elevation Cushion *(Comfort-Tek cover)* **$522**
XCSH15 ❑ ROHO® Hybrid Elite SR™ Single Compartment Cushion *(Fits seat widths 14" to 19")* **$739**
XCSH14 ❑ ROHO® QUADTRO SELECT® Cushion *(Fits seat widths 14" to 19")* Profile: ❑ Low ❑ Mid ❑ High **$711**
XCSH16 ❑ ROHO® Hybrid Select Cushion *(Fits seat widths 14" to 19")* **$756**

CUSTOM CONFIGURATION OPTIONS

SIDE GUARDS

Aluminum

XSDG2 ❑ Rigid Removable ❑ Small **OR** ❑ Std **$318**
XSDG3 ❑ Quad Removable w/Hole ❑ Small **OR** ❑ Std **$345**
XSDG6 ❑ Fendered Adjustable *(Requires Tension Adjustable by Straps Back Upholstery. Not available with Angle-Adjustable Fold-Down Seat Backs.)* **$437**

Carbon Fiber (2x2 Twill Weave)

XSDG7 ❑ Rigid Removable ❑ Small **OR** ❑ Std **$372**
XSDG8 ❑ Quad Removable w/Hole ❑ Small **OR** ❑ Std **$410**

❑ **Custom Offset Profiled Sideguards** CMD 007. Please specify desired offset to nearest ±½" (e.g., ±0.50") and sideguard type (rigid or fold-down) in the Notes section of the order form. Sideguard material must be selected. Some limitations may apply.

ARMRESTS *(Desk Arms come with built-in Side Guards.)*

XARM1 Swing Away Tubular *(Not available with Heavy Duty Frame, Folding Stabilizer Bar with Short or Medium Seat Back Height ranges or Depth Adjustable Back.)* **$284**
❑ 9" - 12" (22.9 to 30.5cm) **OR** ❑ 12" - 15" (30.5 to 38.1cm)
XARM4 ❑ Swing Away - Flip Back Tubular *(Not available with Heavy Duty Frame, Folding Stabilizer Bar or Depth Adjustable Back.)* **$345**
XARM2 Removable Height Adjustable Desk Arm with Rigid Side Guard *(Requires 14" minimum Seat Depth B.)* **$394**
❑ 9" to 12" (22.9 to 30.5cm) **OR** ❑ 12" to 15" (30.5 to 38.1cm)
❑ Standard Length Pad (10") **OR** ❑ Full Length Pad (14")
XARM3 Removable Height Adjustable Desk Arm with Rigid Side Guard and Transfer Loop *(Requires 16" minimum Seat Depth B.)* **$410**
❑ 9" to 12" (22.9 to 30.5cm) **OR** ❑ 12" to 15" (30.5 to 38.1cm)
❑ Standard Length Pad (10") **OR** ❑ Full Length Pad (14")

Available Armrest Option

XARM5 ❑ Covered in Black Ultrasuede *(Not available with Desk Arms)* **$126**

SEAT BELTS

XBLT1 ❑ Velcro Adjustable, Black Nylon Webbing **$61**
XBLT2 ❑ Bodypoint® 2" Push-Button Buckle (Auto-Style.) **$104**
XBLT4 ❑ Bodypoint® 1" Wide Push-Button Buckle Padded (Auto-Style.) *(Not available with 19" - 22" Rear Seat Widths A.)* **$187**

XBLT5 ❑ Bodypoint® 1.5" Wide Push-Button Buckle Padded (Auto-Style.) *(Not available with 19" - 22" Rear Seat Widths A.)* **$187**
XBL10 ❑ Bodypoint® Optional Band Clamp Mounting Hardware **$22**
XBL16 ❑ Bodypoint® EvoFlex® Pelvic Stabilizer Push Button **$263**

CALF STRAP
XCLF2 Velcro Adjustable **$50**
❑ Small (Recommended for 9"- 12" (22.9-30.5cm) Footrest Widths)
❑ Medium (Recommended for 11"- 15" (27.9-38.1cm) Footrest Widths)
❑ Large (Recommended for 14"- 17" (35.6-43.2cm) Footrest Widths)
❑ Xtra Large (Recommended for 16"- 19" (40.6-48.3cm) Footrest Widths)
XCLF3 Bodypoint® Padded Velcro Adjustable **$88**
❑ Medium (Recommended for 12"- 15" (30.5-38.1cm) Footrest Widths)
❑ Large (Recommended for 16"- 20" (40.6-50.8cm) Footrest Widths)
XCLF1 ❑ Buckle Adjustable, Black Nylon Webbing **$34**

RESIDUAL LIMB SUPPORT
XRSL1 ❑ Residual Limb Support (8" width x 10" length) **$563**
XRSL2 ❑ Residual Limb Support Pair (8" width x 10" length) **$1126**

BACKPACK
XBCK3 ❑ Black Permobil Backpack **$104**
SEAT POUCH
XPCH3 ❑ Black Permobil Seat Pouch **$66**
XPCH4 ❑ Bodypoint® Mobility Bag **$143**

SPOKE GUARDS
XGRD1 ❑ Clear *(Not available with Mag Rear Wheels.)* **$148**

CUSTOM CONFIGURATION OPTIONS

ANTI-TIPS
XTIP1 ❑ Rear Aluminum - Black **$214**
XTIP7 ❑ Black Aluminum Single **$110**
Mount on ❑ Left Side or ❑ Right Side **NCO**
XTIP2 ❑ User Friendly Flip-up **$394**
XTIP8 ❑ User Friendly Flip-up Single **$187**
Mount on ❑ Left Side or ❑ Right Side **NCO**
XTIP9 ❑ Tip Assist **$111**

ACCESSORIES
XUEST1 Upper Extremity Support Tray
❑ 12" to 14" (30.5-35.6cm) **OR** ❑ 13" to 15" (33-38.1cm) Seat Widths A *(Requires Armrests.)* **$305**
XLUG1 ❑ Luggage Carriers
(Not available with High Mount Swing Away Footrests or 1-Piece Flip-up Footrest.) **$153**
XMPCT2 Neoprene Impact Guards with Ultrasuede Stripe *(Not available with High Mount Footrests, 90° Hangers or Elevating Leg Rest.)* ❑ Black **$116**
XCH1 ❑ Crutch Holder **$160**

GENERAL

More options and frame modifications may be available through our Creative Mobility Division! Please contact customer service for details or click here to view options.

Permobil manufactures TiLite manual wheelchairs in a wide variety of configurations to meet the varied needs of wheelchair users. The final selection of a particular model, its options and accessories, and its measurements rests solely with the wheelchair user and advising healthcare professional. These wheelchairs must be fitted by a qualified healthcare professional.

Get the latest order forms at permobilus.com. Prices, standard features, options and accessories are subject to change without notice. All rights reserved. Trademarks are identified by symbols™ and ®. TiLite, TiFit, the TiLite logo, Ti, the Ti logo, and TiShaft are registered trademarks of TiSport, LLC and are licensed to Permobil. Permobil® is a registered trademark of Permobil. Adobe®, Acrobat®, Acrobat Professional® and Reader® are registered trademarks of Adobe Systems Inc. Bodypoint® is a registered trademark of Bodypoint Inc. Kenda® is a registered trademark of Kenda Rubber Industrial Co. Ltd. ROHO®, AGILITY®, Low Profile® and Quadtro Select® are registered trademarks of ROHO Inc. Schwalbe® is a registered trademark of Ralf Bohle GmbH. The Natural-Fit® and Out-Front® are registered trademarks of Three Rivers Holdings, LLC. The ACTA-BACK®, ACTA-EMBRACE™, COMFORT-TEK™, COMPASS®, CURVE®, ELEMENTS®, and STRETCH AIR™ are registered trademarks of THE COMFORT COMPANY® and are licensed to Permobil. Q'Straint® is a registered trademark of Q'Straint Inc.

NOTES

QUOTE THIS CHAIR If you are using Adobe Acrobat, this order form may be converted into a quote request or into an order by clicking one of the buttons (this feature is available exclusively to TiLite dealers and distributors). A TiLite Quote or a TiLite Order Confirmation will be sent to you within 24 hours. **ORDER THIS CHAIR**